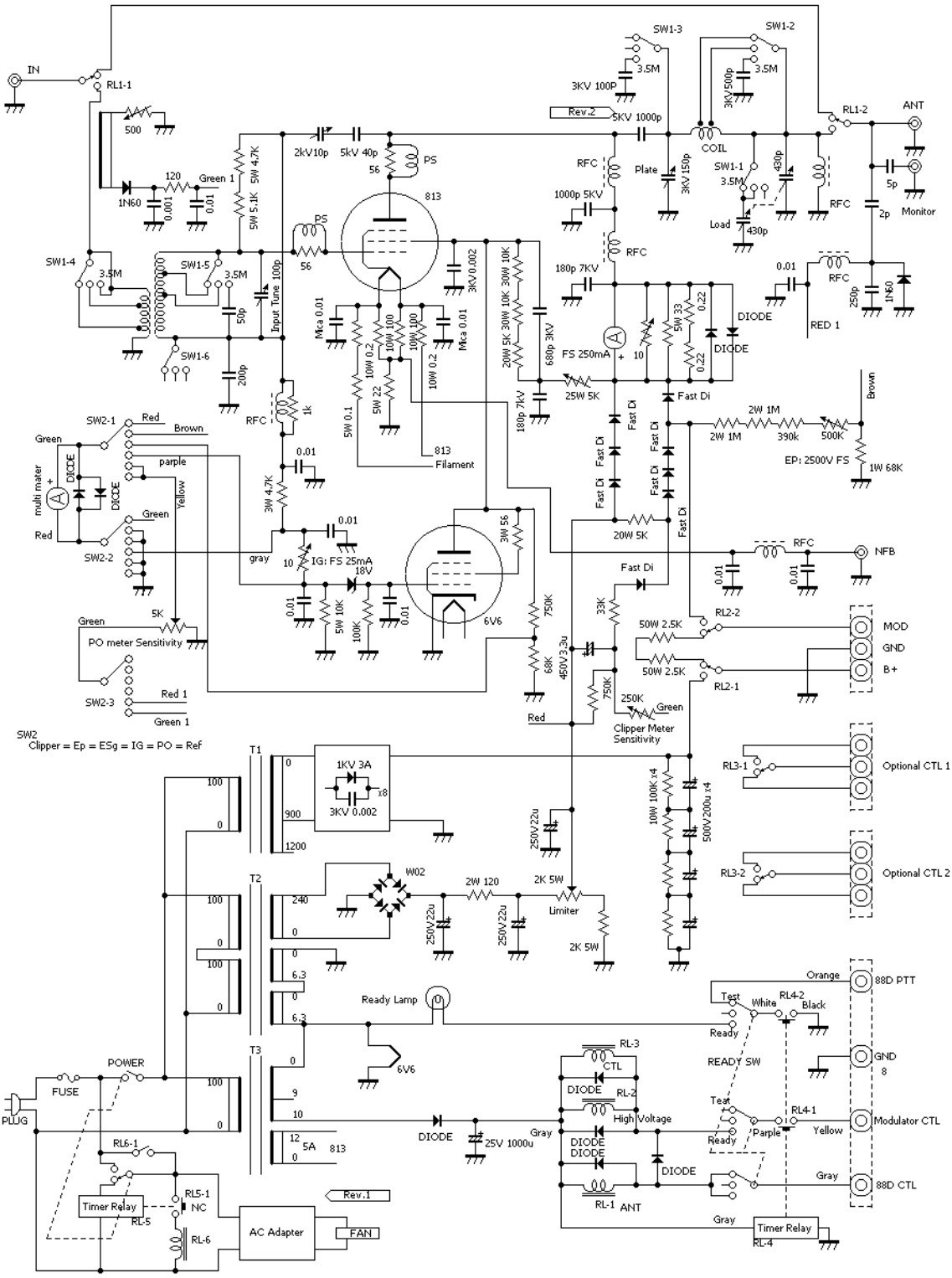

* All diodes are 1N4007 1000V 1A

* All Fast Di's are 05NU41(Toshiba) 1000V 0.5A

Rev.2 Capacitor change (March 20th, 2013)
Rev.1 FAN off-delay (July 23rd, 2011)
Nov.13th, 2005 JR3XUH